Z 254F, 967954001-01, 2020-05

SPARE PARTS LIST

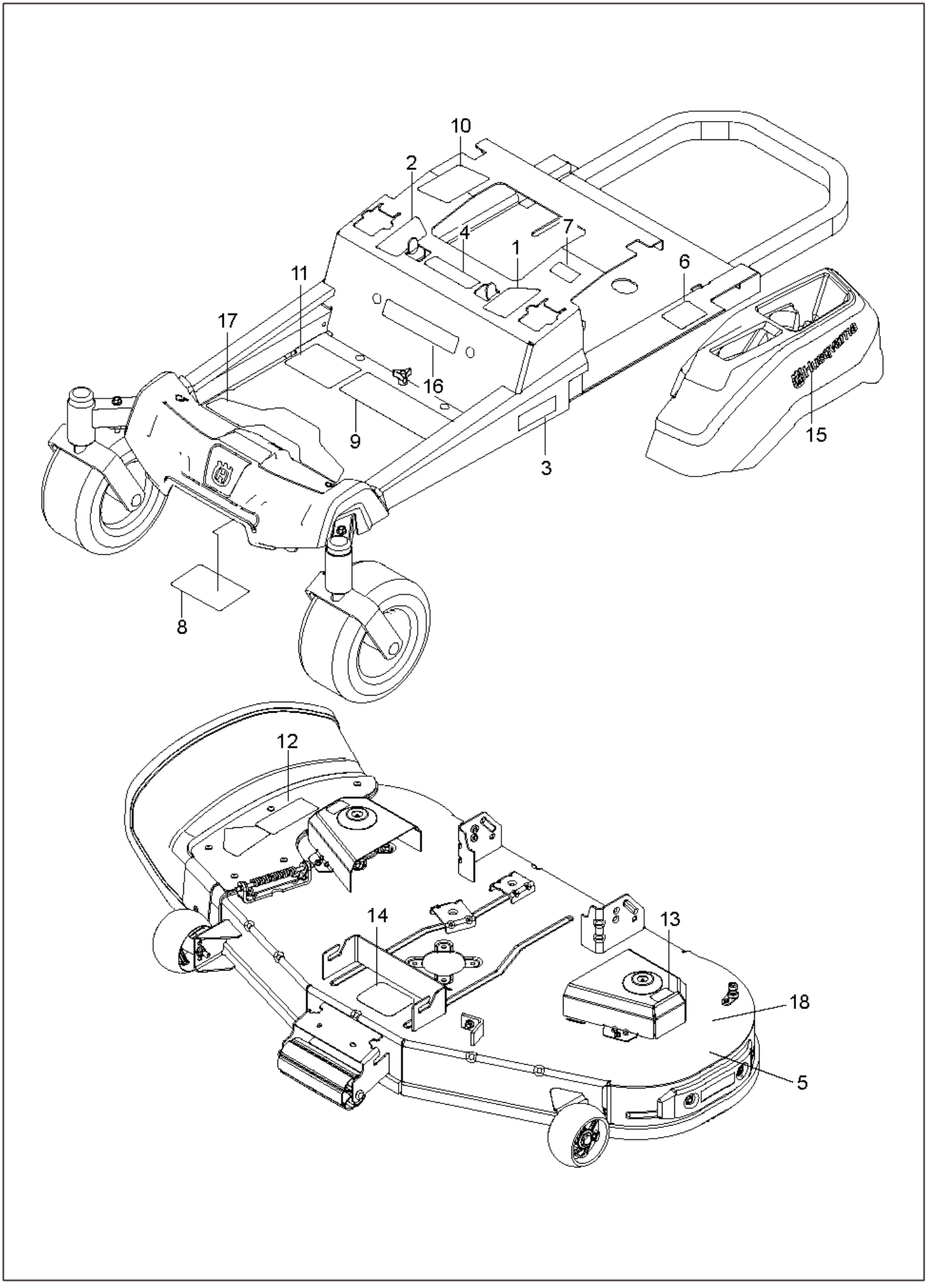
10
2
4
7
1
6
11
17
16
9
3
15
8
12
14
13
18
5

REF.	PART NO.	DESCRIPTION	REMARK	QTY.	KIT
1	587595601	DECAL		1	
2	587595501	DECAL		1	
3	592869901	DECAL		2	
4	539105745	DECAL		1	
5	593808801	DECAL		1	
6	539108385	DECAL		1	
7	539108386	DECAL		1	
8	539109897	DECAL		1	
9	590485501	DECAL		1	
10	532423829	DECAL		1	
11	591357301	DECAL		1	
12	586978801	DECAL		1	
13	589357901	DECAL		1	
14	591163901	DECAL		1	
15	577469001	DECAL		2	
16	591357301	DECAL		1	
17	587000701	PAD		1	
18	592898301	DECAL		1	

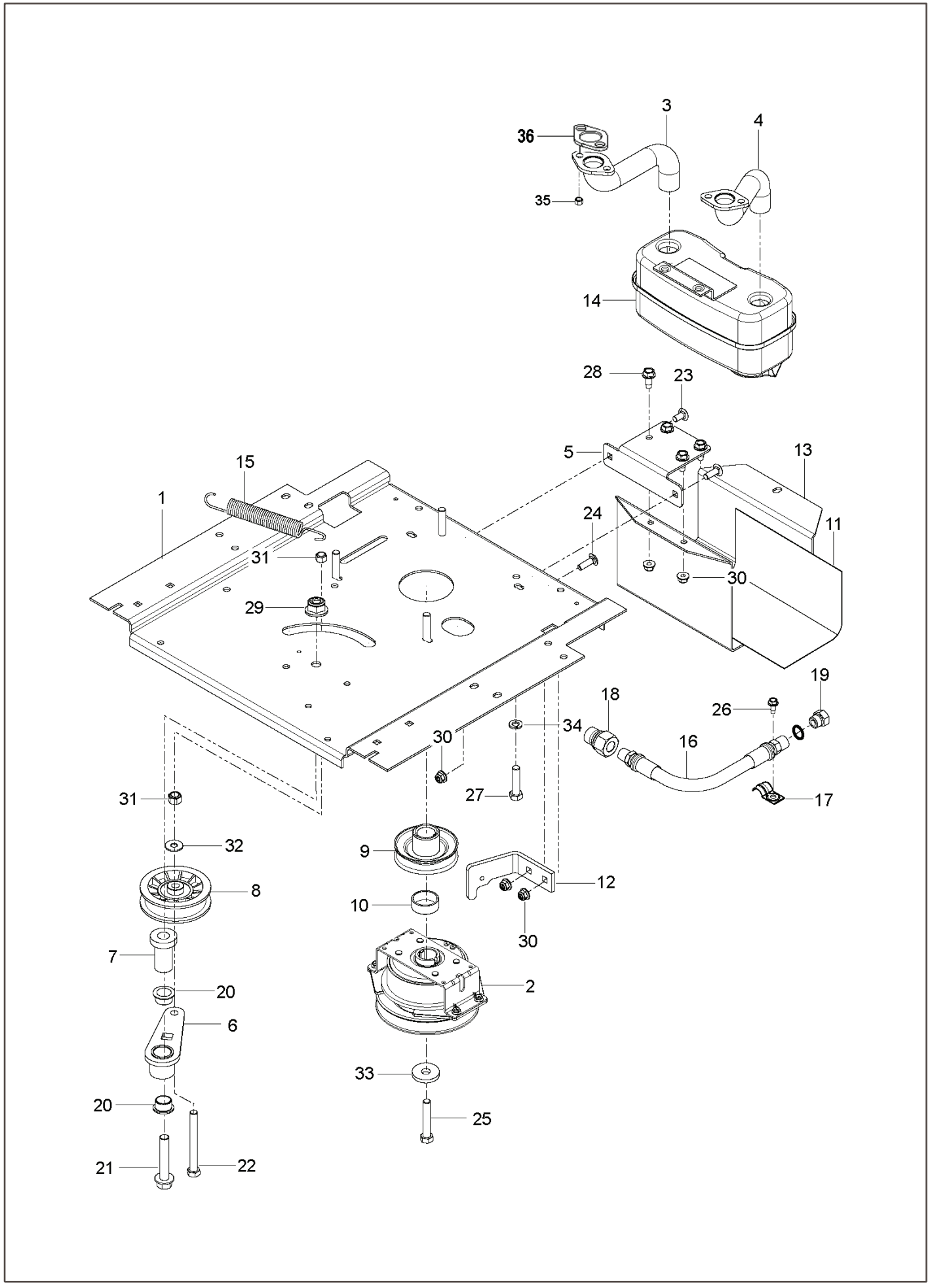
3
4
36
35
14
28
23
5
13
15
1
24
11
31
30
29
19
18
26
34
30
16
27
17
31
32
9
12
8
10
30
7
2
20
6
33
20
25
21
22

REF.	PART NO.	DESCRIPTION	REMARK	QTY.	KIT
1	588017102	PLATE		1	
2	587241601	CLUTCH		1	
3	583955701	TUBE		1	
4	583955601	TUBE		1	
5	581886702	BRACKET		1	
6	532448145	ARM		1	
7	582538901	SPINDLE		1	
8	539110311	PULLEY		1	
9	587537401	PULLEY		1	
10	587660101	SPACER		1	
11	539132859	HEAT SHIELD		1	
12	587633302	STOP		1	
13	587451202	GUARD		1	
14	539131604	MUFFLER ASSY		1	
15	532196105	SPRING		1	
16	584825501	HOSE ASSY		2	19
17	539101363	CLAMP		1	
18	522599001	ADAPTER		1	
19	585807101	PLUG		1	
20	501603701	BEARING		2	
21	582539501	BOLT	For 970458901-01, 970458901-00	1	
21	582539502	BOLT	For 97046750100	1	
22	874520656	BOLT	For 970458901-01, 970458901-00	1	
22	596433901	SCREW	For 97046750100	1	
23	539990316	BOLT	For 970458901-01, 970458901-00	2	
23	595901601	BOLT	For 97046750100	1	
24	539990208	SCREW		2	
25	581332804	BOLT	For 970458901-01, 970458901-00	1	
25	581332806	BOLT	For 97046750100	1	
25	581332803	BOLT	For 967844801-02	1	
26	817490410	SCREW	For 970458901-01, 970458901-00	1	
26	596637301	SCREW	For 97046750100	1	
27	874780620	BOLT	For 970458901-01, 970458901-00	4	
27	596564402	BOLT	For 97046750100	4	
28	817490512	SCREW	For 970458901-01, 970458901-00	4	
28	596135901	BOLT	For 97046750100	4	
29	521991101	NUT	For 970458901-01, 970458901-00	1	
29	521991102	NUT	For 97046750100	1	
30	539112899	NUT, 5/16-18, NYLOC	For 970458901-01, 970458901-00	5	
30	594944401	NUT	For 97046750100	5	
31	539976979	NUT		2	
32	539990692	WASHER	For 970458901-01, 970458901-00	2	
32	596134901	WASHER	For 97046750100	2	
32	819121414	WASHER	For 967844801-02	1	
33	532126197	WASHER		1	
34	810030600	WASHER	For 970458901-01, 970458901-00	4	
34	596238701	WASHER	For 97046750100	4	
34	539990118	WASHER	For 967844801-02	1	
35	532184362	NUT	For 967844801-02, 97046750100	4	
36	532178151	MUFFLER GASKET	For 967844801-02	1	
	522598601	PIGTAIL		1	
	589543901	INSTRUCTION		1	

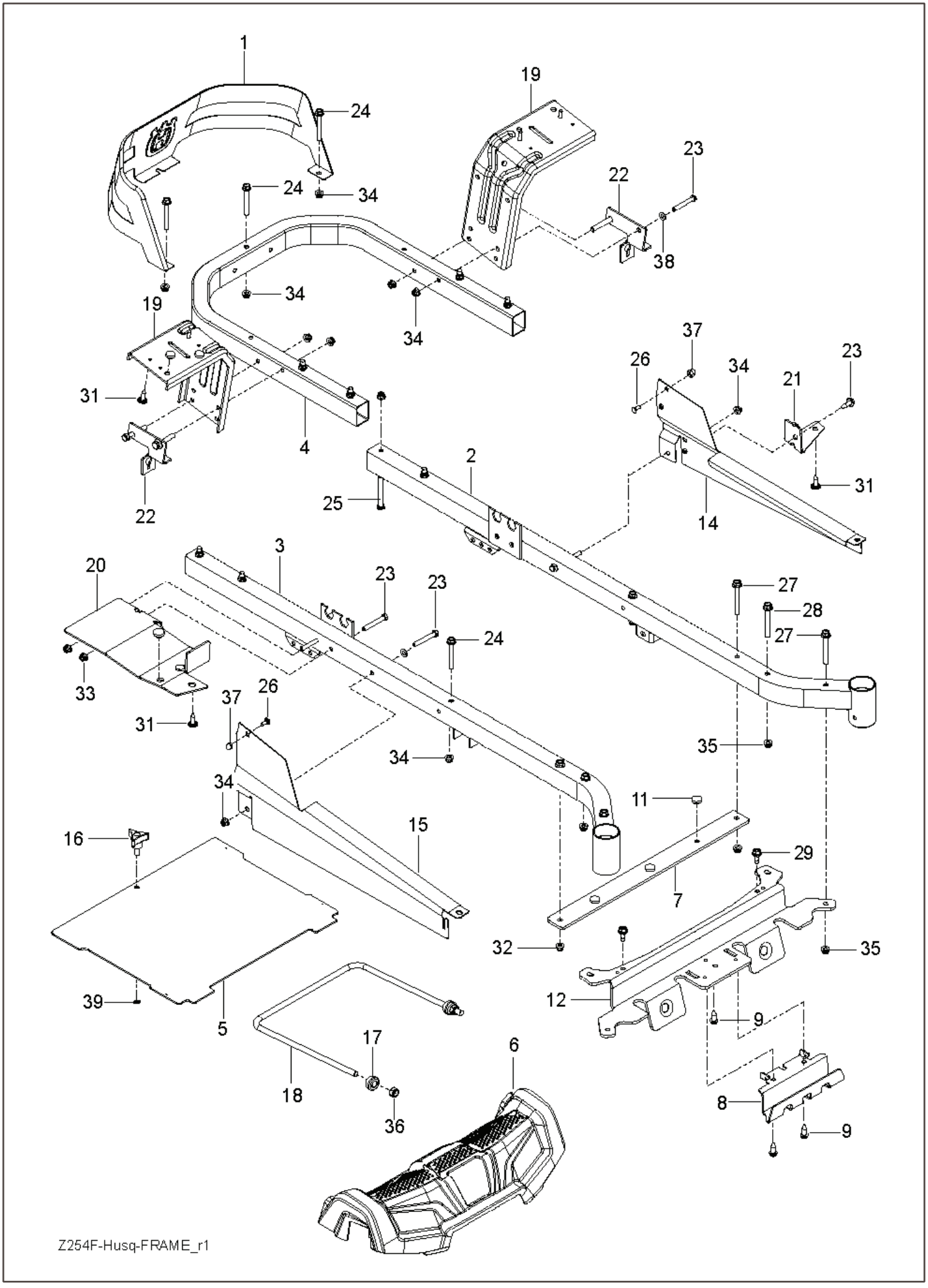
1
19
24
24
34
23
22
38
34
34
19
37
26
34
21
23
31
4
2
25
22
14
31
3
20
23
23
27
28
24
27
33
31
37
26
35
34
34
11
16
15
29
7
32
35
12
39
5
9
17
6
18
36
8
9
Z254F-Husq-FRAME_r1

REF.	PART NO.	DESCRIPTION	REMARK	QTY.	KIT
1	585039802	GUARD		1	
2	589283402	FRAME TUBE		1	
3	589283302	FRAME TUBE		1	
4	584991002	TUBE		1	
5	581448602	PLATE		1	
6	586703801	FRONT COVER		1	
7	585523004	SUPPORT		1	
8	585523204	SKID PLATE		1	
9	817000510	BOLT		1	
11	585989301	BUMPER		7	
12	585523104	CROSS MEMBER		1	
14	585331602	COVER		1	
15	585331502	COVER		1	
16	539104411	KNOB		1	
17	532195263	BUSHING		2	
18	521938101	LINK		1	
19	580501302	BRACKET		2	
20	585523404	SUPPORT		1	
21	585523604	SUPPORT		1	
22	585474302	BRACKET		2	
23	874780536	BOLT		7	
24	874780544	BOLT		5	
25	874780648	BOLT		8	
26	585940001	BOLT		2	
27	577117701	SCREW		4	
28	586654301	BOLT		2	
29	586881101	BOLT		2	
31	532416358	SCREW		6	
32	532421756	SCREW		2	
33	873900500	NUT		2	
34	539112899	NUT, 5/16–18, NYLOC		9	
35	521996501	NUT		8	
36	539119124	NUT		2	
37	585938101	NUT		2	
38	819111116	WASHER		6	
39	532423063	WASHER		1	

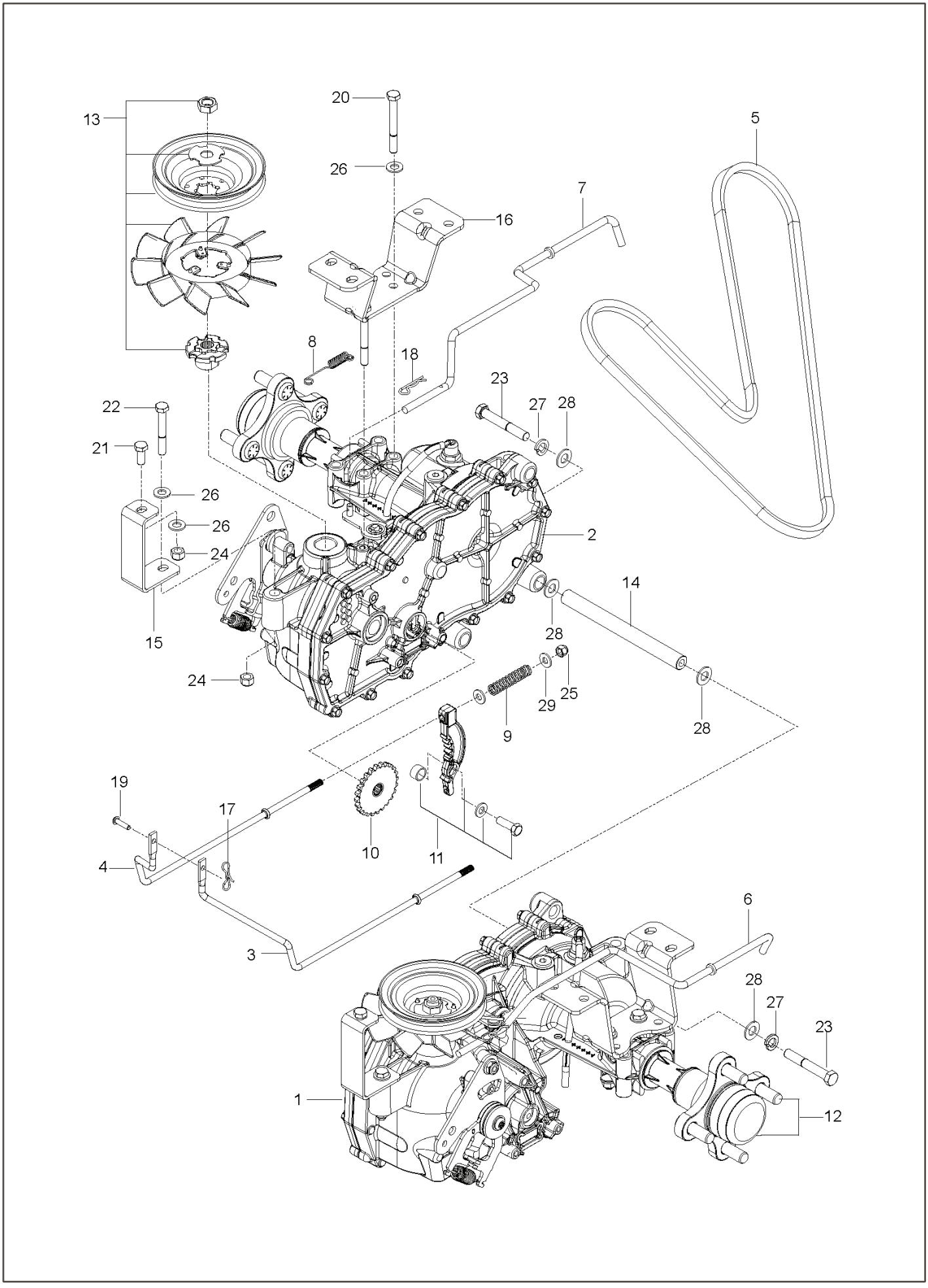
13
20
26
5
7
16
8
18
23
27
28
22
21
26
26
24
2
15
14
28
24
29
25
9
28
19
17
10
11
4
3
6
28
27
23
1
12

REF.	PART NO.	DESCRIPTION	REMARK	QTY.	KIT
1	510375601	TRANSMISSION		1	
2	510375602	TRANSMISSION		1	
3	574030501	LINKAGE		1	
4	574030502	LINKAGE		1	
5	539110411	BELT		1	
6	585474401	ROD		1	
7	585474501	ROD		1	
8	586665101	SPRING		2	
9	539110342	SPRING		2	
10	539120080	DISC		2	
11	539120079	ARM		2	
12	575507001	KIT		1	
13	501403602	TRANSMISSION KIT		2	
14	510184104	SPACING TUBE		2	
15	580806502	SUPPORT		2	
16	580806602	BRACKET		2	
17	587225301	PIN		1	
18	539976988	PIN		4	
19	587115301	PEN		1	
20	874780544	BOLT		4	
21	539976934	SCREW		2	
22	874780536	BOLT		2	
23	539990637	SCREW		4	
24	873800500	LOCK NUT		8	
25	539976978	NUT		2	
26	819111116	WASHER		16	
27	539990118	WASHER		4	
28	819131316	WASHER		8	
29	819091016	WASHER		4	

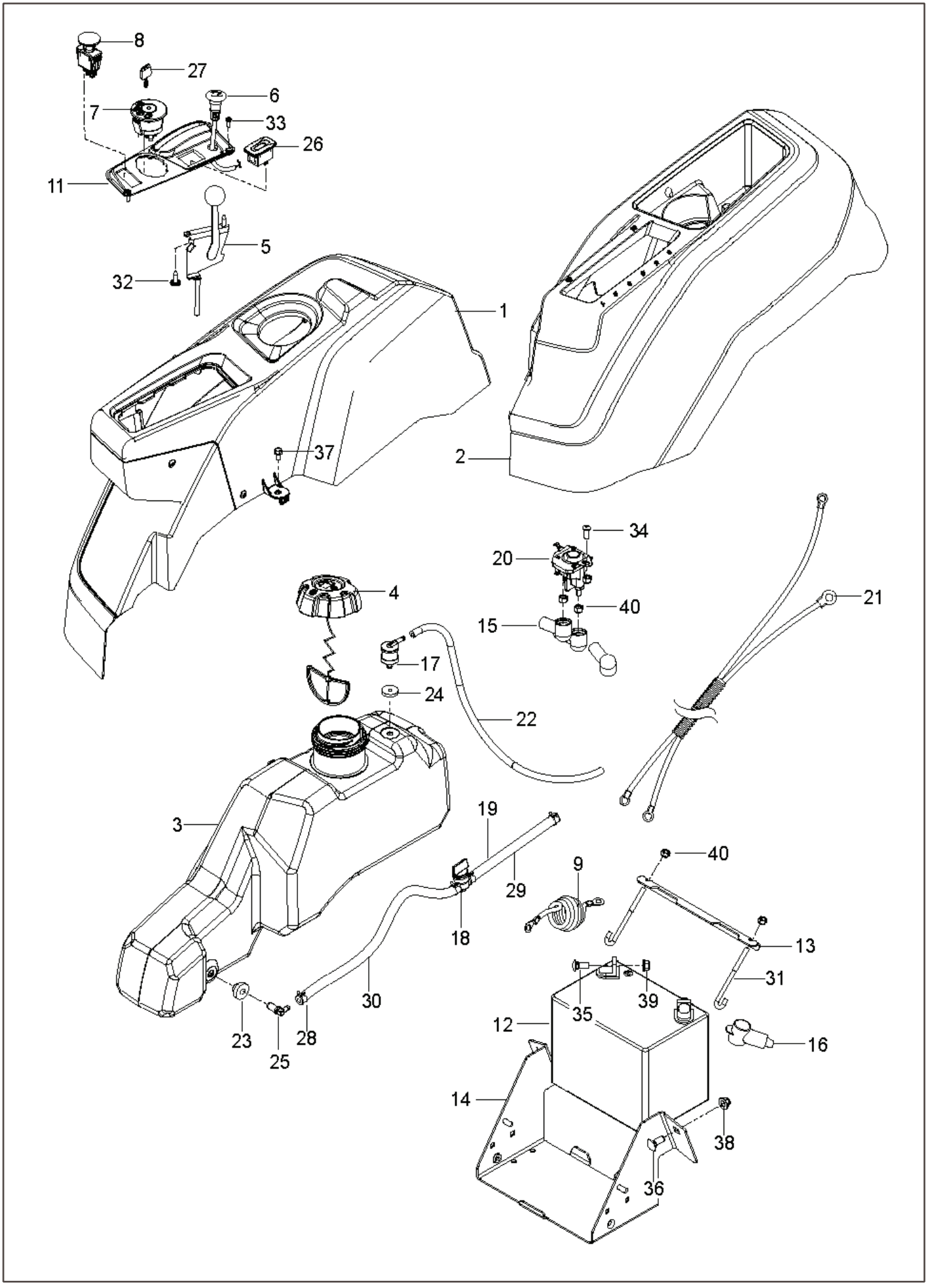
8
27
6
7
33
26
11
5
32
1
37
2
34
20
4
40
21
15
17
24
22
3
19
40
9
29
18
13
31
30
35
39
12
16
23
28
25
14
38
36

REF.	PART NO.	DESCRIPTION	REMARK	QTY.	KIT
1	585522801	CONSOLE ASSY		1	
2	586621201	CONSOLE ASSY		1	
3	589924702	FUEL TANK ASSY	Fits 2.75" filler neck	1	23, 24, 25
4	529989702	CAP	Fits 2.00" filler neck	1	
4	585124801	FUEL CAP ASSY	Fits 2.75" filler neck	1	
5	539112438	THROTTLE CABLE		1	
6	586881501	CHOKE CONTROL ASSY		1	
7	539107541	IGNITION SWITCH		1	
8	582107602	SWITCH		1	
9	586108201	HARNESS		1	
11	585522701	CONTROL PANEL		1	
12	539102463	BATTERY		1	
13	510030003	BRACKET		1	
14	582609602	BOX		1	
15	532131563	COVER		3	
16	539102759	INSULATOR		1	
17	576618101	TANK VENT		1	
18	539916325	VALVE		1	
19	586123906	FUEL HOSE		1	18, 28, 29, 30
20	582042801	SOLENOID		1	
21	587198601	HARNESS		1	
22	587044550	HOSE		1	
23	532003645	BUSHING		1	
24	532437492	GROMMET		1	
25	532139277	NIPPLE		1	
26	586161801	HOUR METER		1	
27	532411933	KEY		1	
28	532123487	HOSE CLAMP		4	
29	587044810	HOSE		1	
30	587044818	HOSE		1	
31	588839401	HOOK		2	
32	532141841	SCREW		2	
33	545227101	SCREW		2	
34	539111229	SCR 1/4–20 X 5/8 BTN SKT HD ZD		1	
35	539990316	BOLT		2	
36	539990645	BOLT		2	
37	817490408	SCREW		2	
38	521996501	NUT		2	
39	539112899	NUT, 5/16–18, NYLOC		2	
40	539976978	NUT		5	
	586337301	HARNESS	NOT SHOWN	1	
	586548101	HARNESS		1	
	532109748	RELAY	NOT SHOWN	1	
	505280001	TIE WRAP	NOT SHOWN	1	

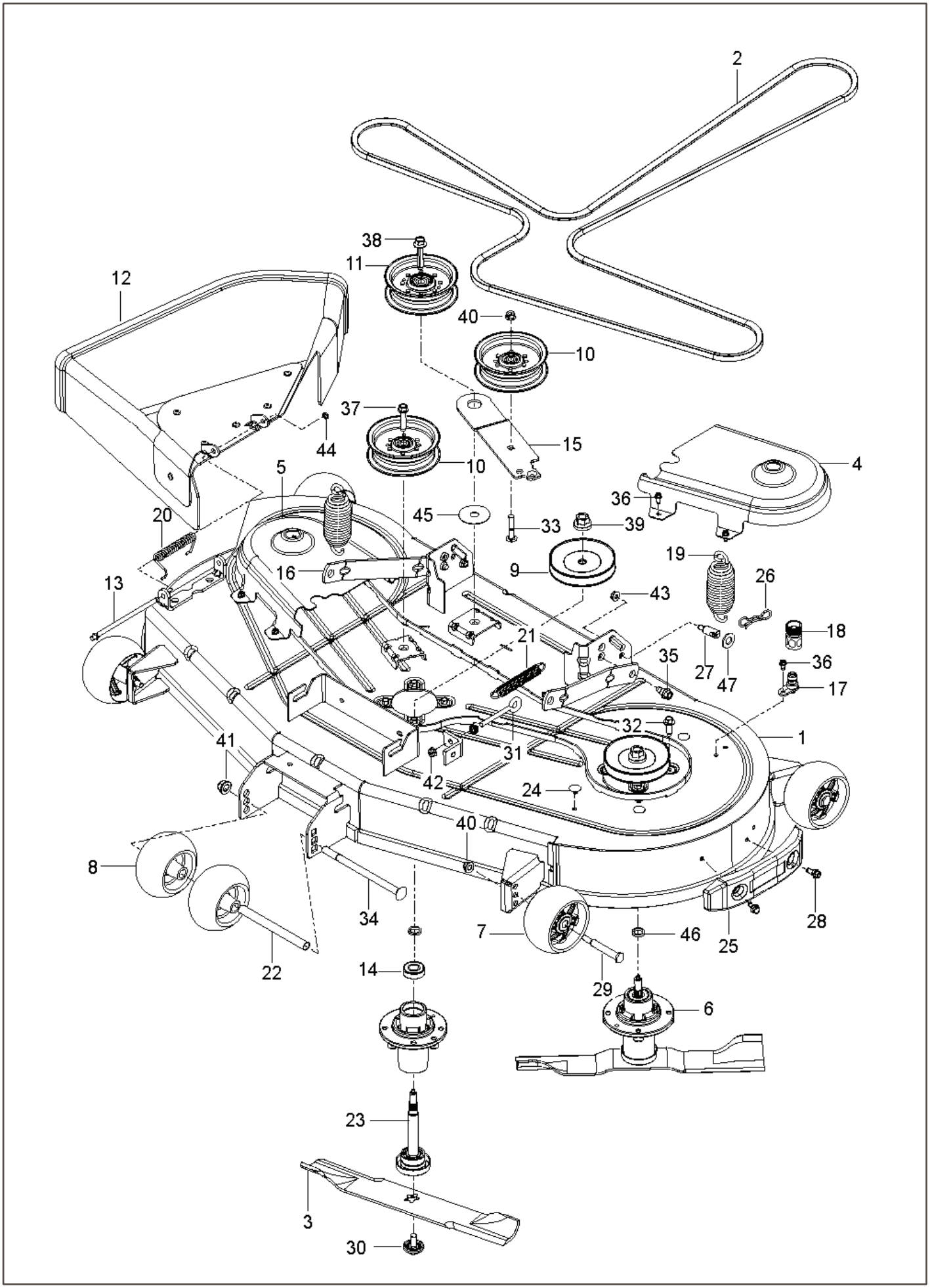
2
38
11
12
40
10
37
44
15
10
4
5
36
20
45
33
39
19
16
9
26
13
43
18
21
35
27
47
36
17
32
1
41
31
42
24
40
8
34
7
46
25
28
22
14
29
6
23
3
30

REF.	PART NO.	DESCRIPTION	REMARK	QTY.	KIT
1	582359102	DECK SHELL ASSY		1	
2	592951801	BELT		1	
3	582760501	BLADE		3	
4	590304403	COVER		1	
5	590304203	COVER		1	
6	539131898	SPINDLE		3	14, 23
7	589527301	WHEEL		4	
8	574169601	ROLLER		2	
9	532175708	PULLEY ASSY		3	
10	532197379	PULLEY		2	
11	532197380	PULLEY		1	
12	590632201	DEFLECTOR ASSY		1	
13	532131491	SHAFT		1	
14	532110485	BEARING		1	
15	582219602	ARM		1	
16	587140502	ARM		2	
17	532415598	HOSE COUPLING		1	
18	532416405	COUPLING		1	
19	539118762	SPRING		2	
20	587354701	SPRING		1	
21	587358401	SPRING		1	
22	574196501	TUBE		1	
23	532187291	SHAFT		1	
24	589813301	PLUG		3	
25	590732501	BUMPER ASSY		1	
26	532194209	SPRING		2	
27	532195161	STUD		2	
28	532170165	BOLT		2	
29	532193406	BOLT		4	
30	532193003	SCREW		3	
31	539115574	EYE BOLT		1	
32	584953901	BOLT		12	
33	872110616	BOLT		1	
34	872140864	BOLT		1	
35	532196539	BOLT		2	
36	532137729	SCREW		9	
37	817490628	SCREW		1	
38	588438301	SCREW		1	
39	532400234	NUT		3	
40	873900600	NUT		5	
41	521991101	NUT		1	
42	539990585	NUT		2	
43	873900500	NUT		2	
44	532110452	NUT		1	
45	532178515	WASHER		1	
46	532187690	WASHER		3	
47	819191912	WASHER		2	

For 967680901-00, 967954002-00, 96795400100, 967954001-01

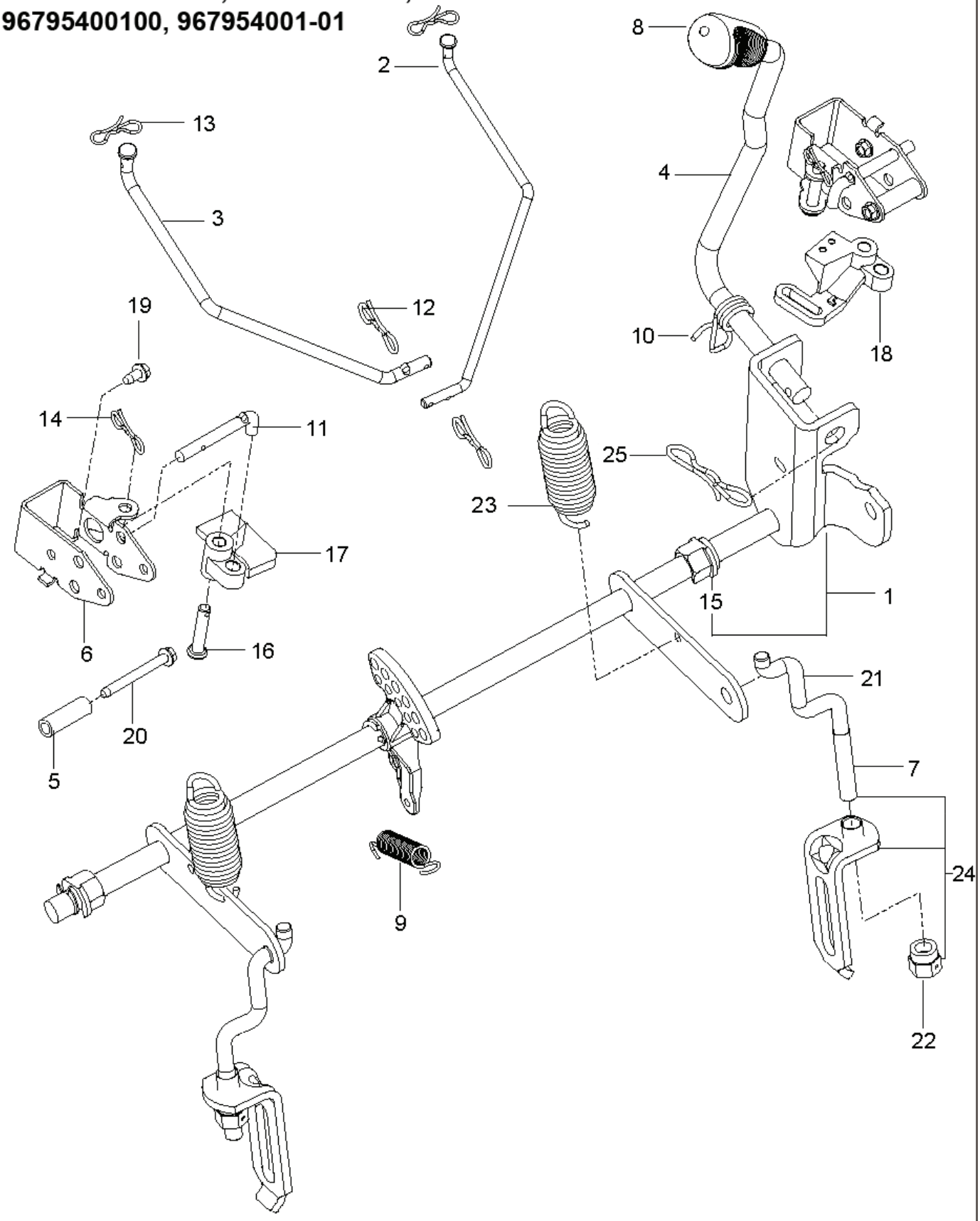

REF.	PART NO.	DESCRIPTION	REMARK	QTY.	KIT
1	587623101	SHAFT ASSY	For 967680901–00	1	
1	586429702	SHAFT ASSY	For 967954002–00, 96795400100, 967954001–01	1	14, 22
2	586457101	LINK		1	
3	586457201	LINK		1	
4	587622901	LIFTING LEVER ASSY	For 967680901–00	1	8, 10, 13, 14
4	586428701	HANDLE	For 967954002–00, 96795400100, 967954001–01	1	8, 10, 12
5	580486101	SPACER		2	
6	585682102	BRACKET		2	
7	522858601	ASSEMBLY	For 967954002–00, 96795400100, 967954001–01	2	
8	532411555	GRIP		1	
9	586867601	SPRING		1	
10	532196314	SPRING		1	
11	586457501	BELLCRANK	For 967680901–00	1	
11	585682001	ROD	For 967954002–00, 96795400100, 967954001–01	2	
12	587225301	PIN		4	
13	532194209	SPRING	For 967680901–00, 967954002–00	2	
14	532194209	SPRING	For 967680901–00, 967954002–00	2	
14	532194208	PIN	For 967680901–00, 967954002–00	2	
15	510184901	BUSHING		2	
16	585701401	PIN		2	
17	586457501	BELLCRANK	For 967680901–00	1	
18	586457401	BELLCRANK		1	
19	532137729	SCREW		2	
20	586561301	SCREW		2	
21	525847201	LINK	For 967954002–00, 96795400100, 967954001–01	2	
22	532175994	NUT	For 967954002–00, 96795400100, 967954001–01	1	
23	539118762	SPRING	For 967680901–00	1	
24	587623001	LINK ASSY	For 967680901–00	2	
25	532194209	SPRING	For 967680901–00, 967954002–00	2	
25	532194208	PIN	For 967680901–00, 967954002–00	2	

*OPTIONAL

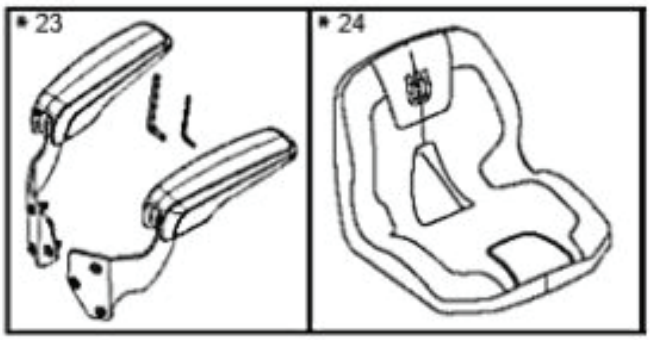
*23
*24

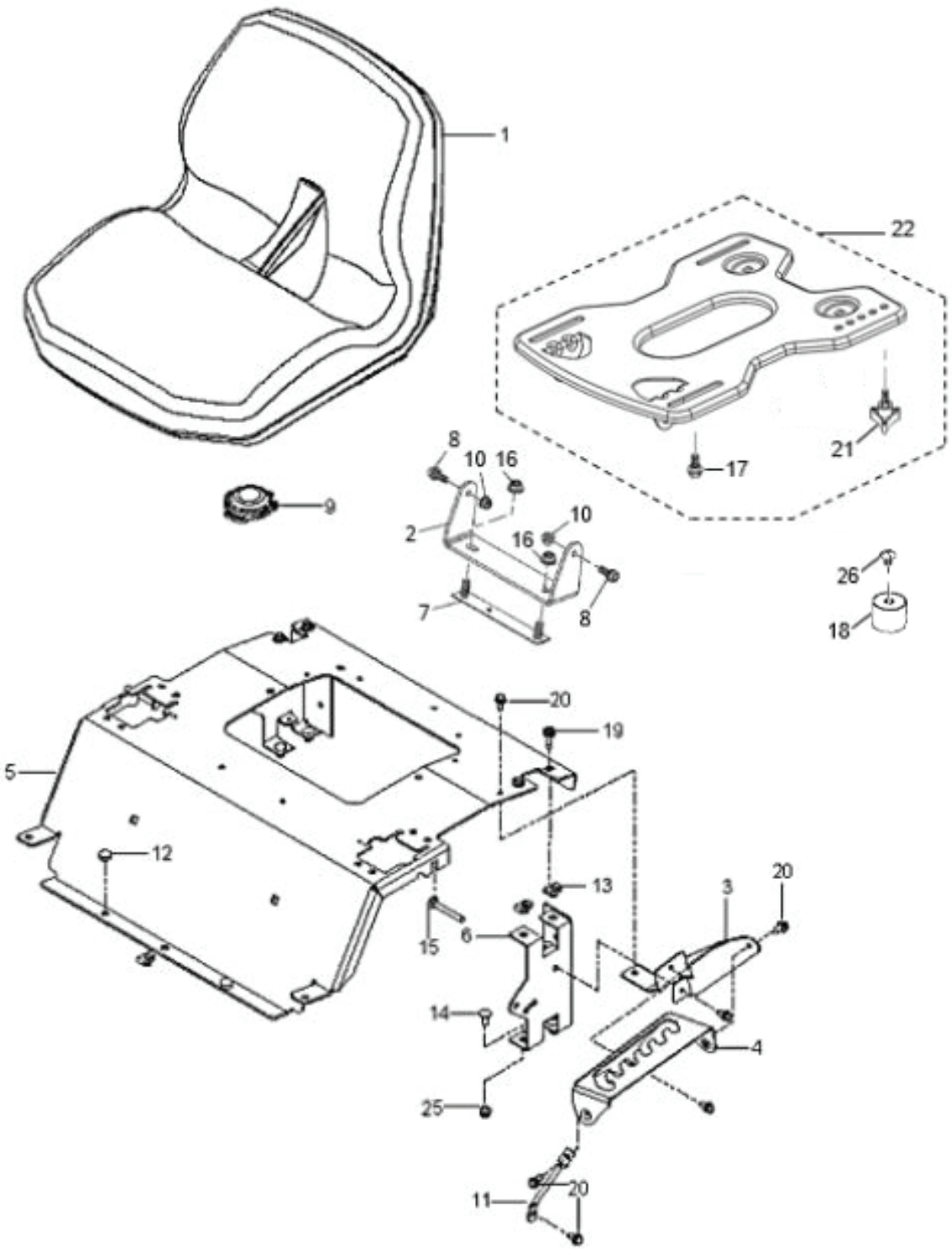
1
22
21
17
8
10
16
9
2
10
16
7
8
26
18
20
19
5
12
13
3
20
15
6
14
4
25
11
20

REF.	PART NO.	DESCRIPTION	REMARK	QTY.	KIT
1	597658101	SEAT		1	
2	597330002	BRACKET		1	
3	586220802	SUPPORT PLATE		1	
4	586221202	PLATE		1	
5	597160003	PLATE		1	
6	580308202	SUPPORT		1	
7	590777602	BRACKET		1	
8	596240701	BOLT		2	
9	532192749	SWITCH.SEAT.DP W/RAMPS		1	
10	594944401	NUT		2	
11	586428601	SUPPORT LEG		1	
12	585989301	BUMPER		2	
13	539104763	CLIP		5	
14	539990316	BOLT		4	
15	510422701	SCREW		2	
16	521996502	NUT		2	
17	597781801	BOLT		2	
18	597553401	BUMPER		2	
19	874490512	BOLT		4	
20	817000510	BOLT		6	
21	597783101	KNOB		2	
22	598001601	SERVICE KIT		1	
23	597658203	SERVICE KIT		1	
24	597959401	COVER		1	
25	539112899	NUT, 5/16–18, NYLOC		4	
26	597869301	BOLT		2	

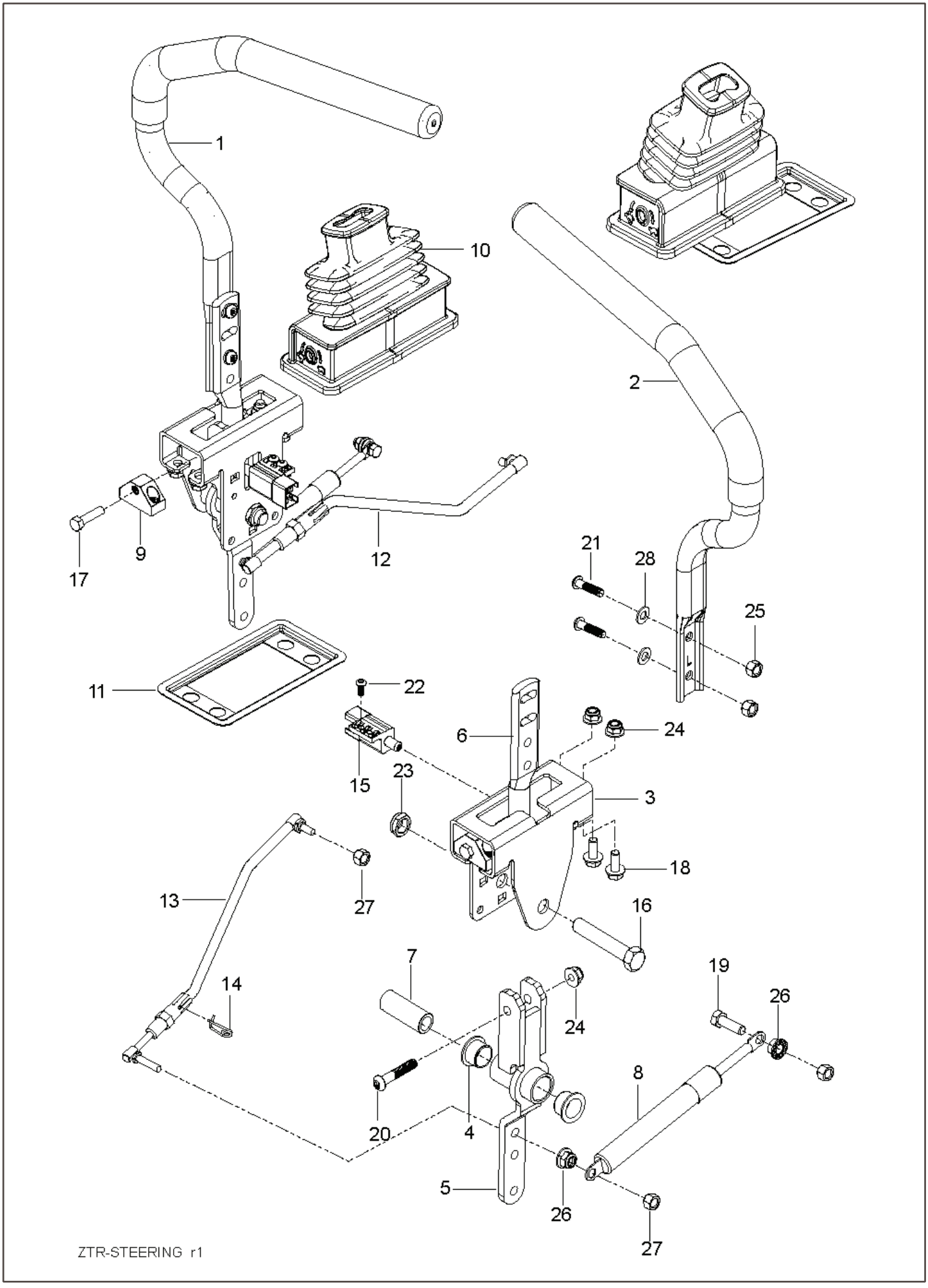

ZTR-STEERING r1

REF.	PART NO.	DESCRIPTION	REMARK	QTY.	KIT
1	590090803	TUBE		1	
2	590090804	TUBE		1	
3	585124705	BRACKET		2	
4	539131518	BEARING		4	
5	576140301	LEVER		2	
6	587601702	LEVER		2	
7	584927201	SPACER		2	
8	539102720	GAS SPRING		2	
9	581437501	BLOCK		2	
10	585831601	BOOT		2	
11	585488202	FLANGE		2	
12	588604901	ROD		1	14
13	588605001	ROD		1	14
14	532199849	SPRING RETAINER		2	
15	587601501	SWITCH		2	
16	874780844	BOLT		2	
17	585986101	BOLT		2	
18	874490512	BOLT		8	
19	539990209	SCREW		2	
20	587885301	SCREW		2	
21	585985901	BOLT		4	
22	586936001	SCREW		2	
23	539108010	NUT		2	
24	539112899	NUT, 5/16–18, NYLOC		10	
25	585986001	NUT		4	
26	539990585	NUT		4	
27	873800500	LOCK NUT		4	
28	819111116	WASHER		4	

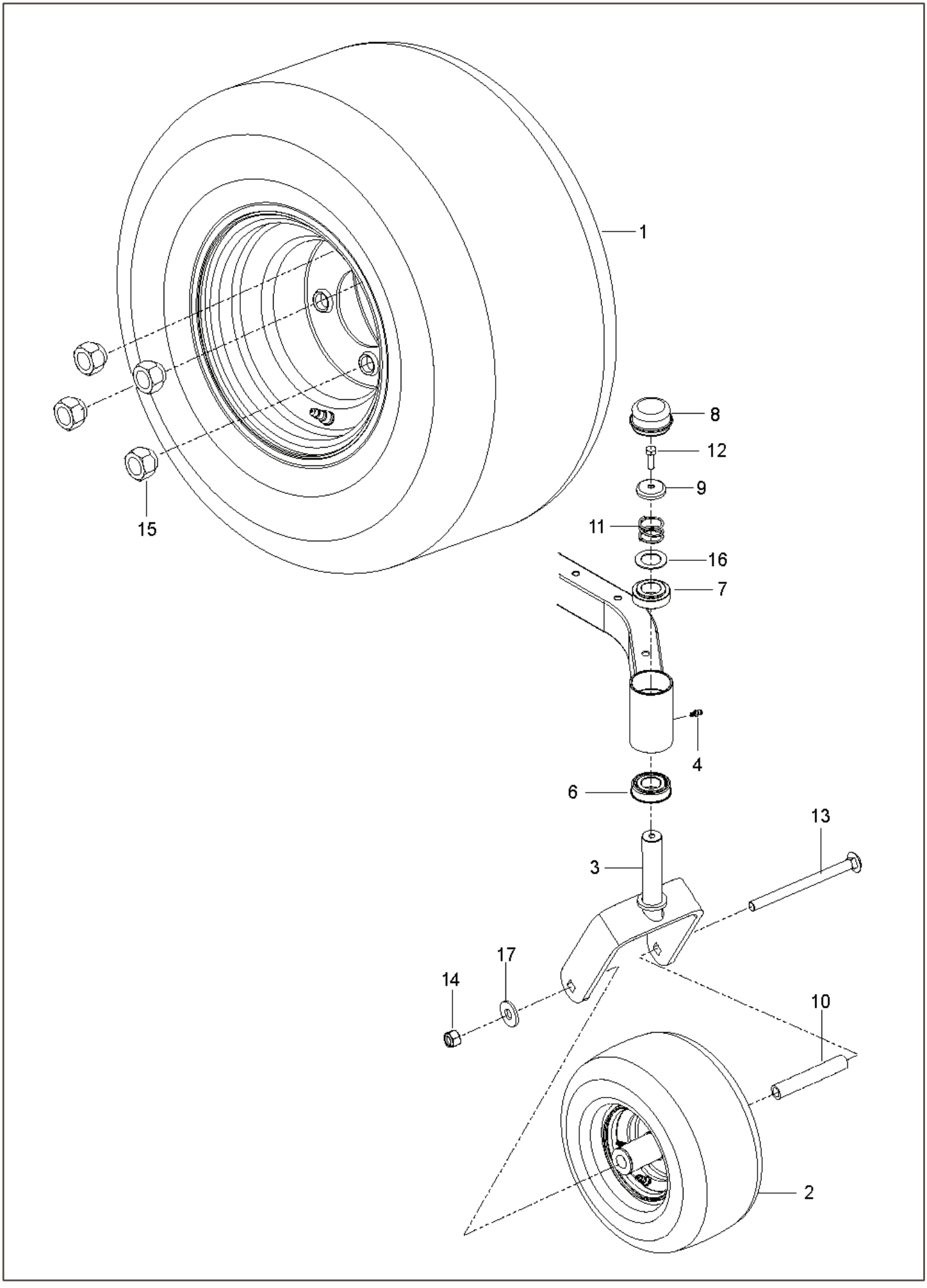
1
15
8
12
9
11
16
7
4
6
13
3
17
14
10
2

REF.	PART NO.	DESCRIPTION	REMARK	QTY.	KIT
1	590486601	WHEEL		2	
2	576588602	WHEEL ASSY		2	
3	586650302	YOKE		2	
4	539115638	FITTING		2	
6	539112660	BEARING		2	
7	539117901	BUSHING		2	
8	539102535	CAP		2	
9	539115749	CASTER PLUG		2	
10	585995401	SPACER		2	
11	539115747	SPRING		2	
12	874950516	SCREW		2	
13	576601501	SCREW		2	
14	873930800	NUT		2	
15	587653902	NUT		8	
16	539115675	WASHER		2	
17	819182212	WASHER		2	

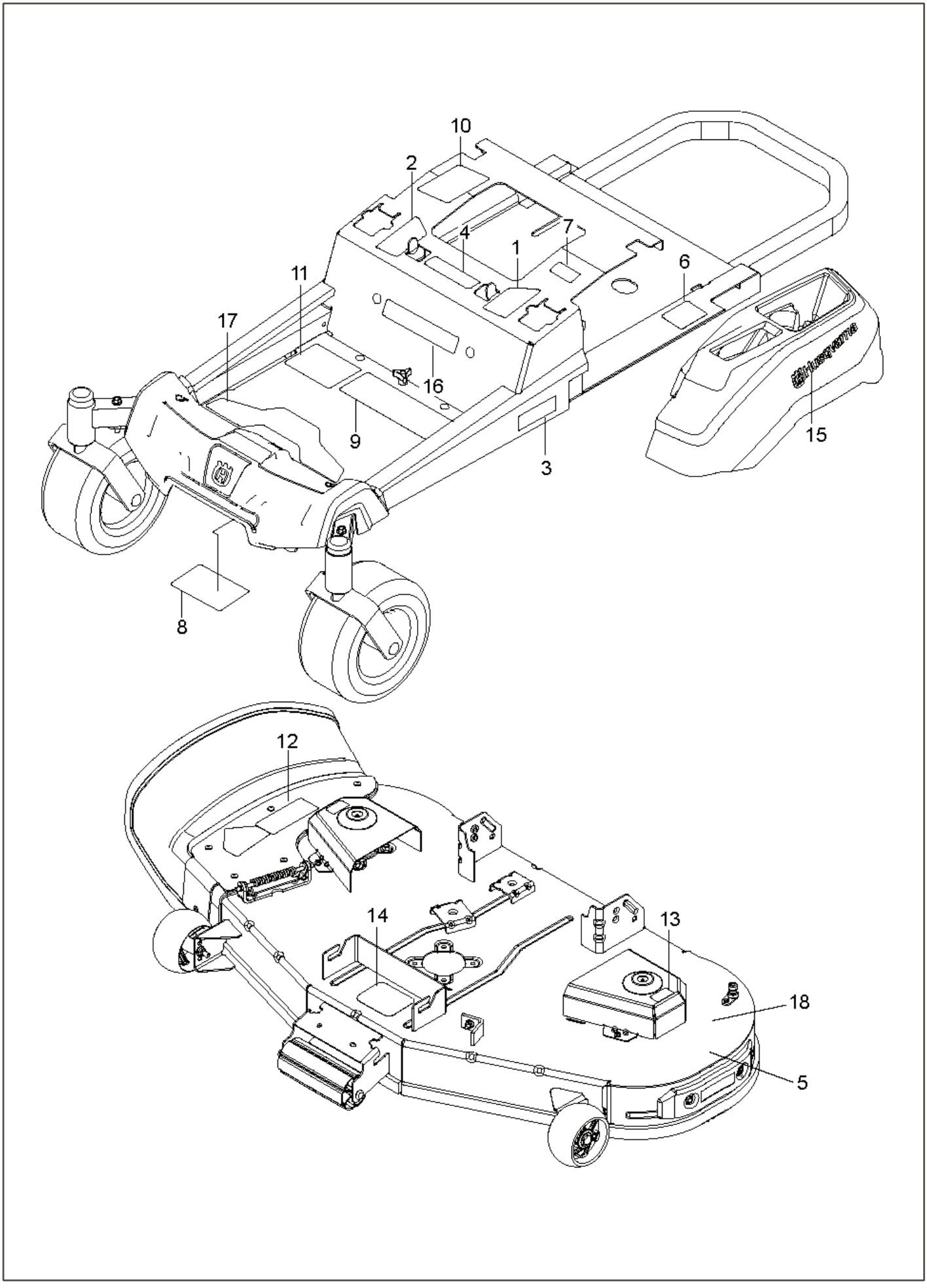
10
2
4
7
1
6
11
17
16
9
3
15
8
12
14
13
18
5

REF.	PART NO.	DESCRIPTION	REMARK	QTY.	KIT
1	587595601	DECAL		1	
2	587595501	DECAL		1	
3	592869901	DECAL		2	
4	539105745	DECAL		1	
5	593808801	DECAL		1	
6	539108385	DECAL		1	
7	539108386	DECAL		1	
8	539109897	DECAL		1	
9	590485501	DECAL		1	
10	532423829	DECAL		1	
11	591357301	DECAL		1	
12	586978801	DECAL		1	
13	589357901	DECAL		1	
14	591163901	DECAL		1	
15	577469001	DECAL		2	
16	591357301	DECAL		1	
17	587000701	PAD		1	
18	592898301	DECAL		1	

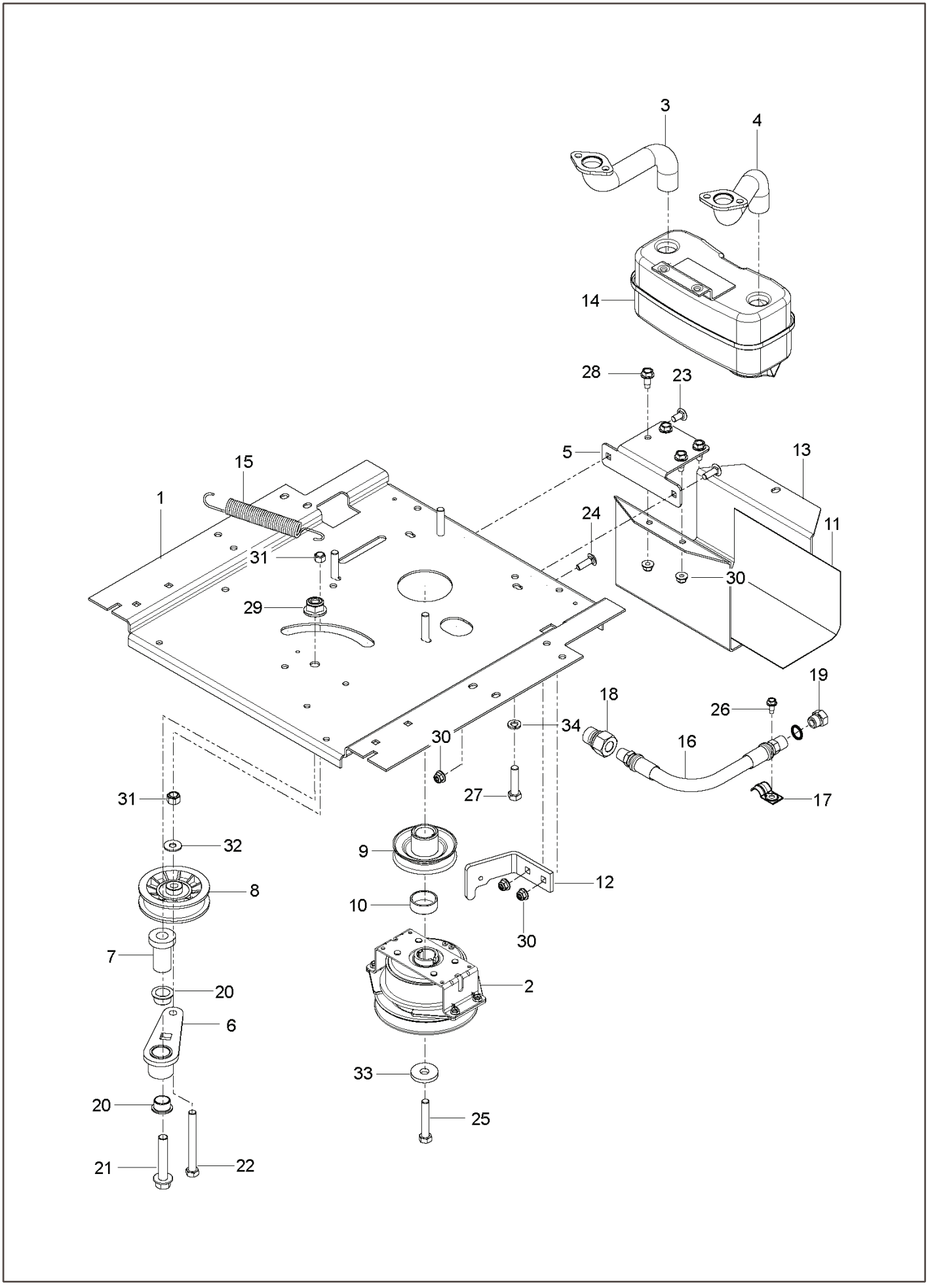
3
4
14
28
23
5
13
15
1
24
11
31
30
29
19
18
26
34
30
16
27
17
31
32
9
12
8
10
30
7
20
2
6
33
20
25
21
22

REF.	PART NO.	DESCRIPTION	REMARK	QTY.	KIT
1	593898602	PLATE		1	
2	587241601	CLUTCH		1	
3	583955701	TUBE		1	
4	583955601	TUBE		1	
5	581886702	BRACKET		1	
6	532448145	ARM		1	
7	582538901	SPINDLE		1	
8	539110311	PULLEY		1	
9	587537401	PULLEY		1	
10	587660101	SPACER		1	
11	539132859	HEAT SHIELD		1	
12	587633302	STOP		1	
13	587451202	GUARD		1	
14	539131604	MUFFLER ASSY		1	
15	532196105	SPRING		1	
16	584825501	HOSE ASSY		2	19
17	539101363	CLAMP		1	
18	522599001	ADAPTER		1	
19	585807101	PLUG		1	
20	501603701	BEARING		2	
21	582539501	BOLT		1	
22	874520656	BOLT		1	
23	539990316	BOLT		2	
24	539990208	SCREW		2	
25	581332803	BOLT		1	
26	817490410	SCREW		1	
27	874780620	BOLT		4	
28	817490512	SCREW		4	
29	521991101	NUT		1	
30	539112899	NUT, 5/16–18, NYLOC		5	
31	539976979	NUT		2	
32	539990692	WASHER		2	
33	532126197	WASHER		1	
34	539990118	WASHER		4	
- -	532178151	MUFFLER GASKET	NOT SHOWN	2	
- -	532184362	NUT		1	
- -	539108120	NUT		1	
	000000000	W/O DESCRIPTION	Engine, Kawasaki FR691V 23 HP, For engine replacement parts, see a Kawasaki dealer.	1	

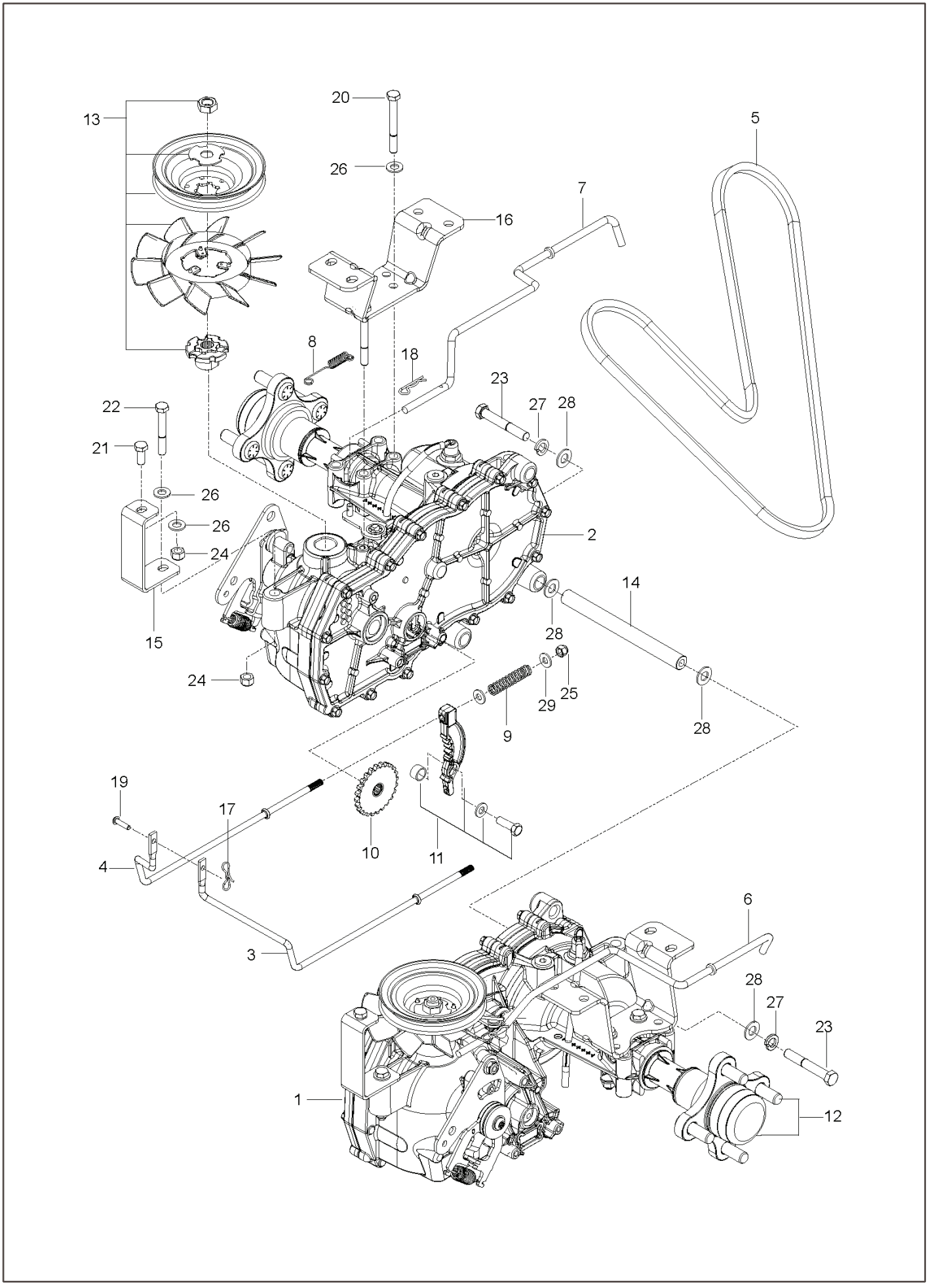
13
20
26
5
7
16
8
18
23
27
28
22
21
26
26
24
2
15
14
28
24
29
25
9
28
19
17
10
11
4
3
6
28
27
23
1
12

REF.	PART NO.	DESCRIPTION	REMARK	QTY.	KIT
1	510375601	TRANSMISSION		1	
2	510375602	TRANSMISSION		1	
3	574030501	LINKAGE		1	
4	574030502	LINKAGE		1	
5	539110411	BELT		1	
6	585474401	ROD		1	
7	585474501	ROD		1	
8	586665101	SPRING		2	
9	539110342	SPRING		2	
10	539120080	DISC		2	
11	539120079	ARM		2	
12	575507001	KIT		1	
13	501403602	TRANSMISSION KIT		2	
14	510184104	SPACING TUBE		2	
15	580806502	SUPPORT		2	
16	580806602	BRACKET		2	
17	587225301	PIN		1	
18	539976988	PIN		4	
19	587115301	PEN		1	
20	874780544	BOLT		4	
21	539976934	SCREW		2	
22	874780536	BOLT		2	
23	539990637	SCREW		4	
24	873800500	LOCK NUT		8	
25	539976978	NUT		2	
26	819111116	WASHER		16	
27	539990118	WASHER		4	
28	819131316	WASHER		8	
29	819091016	WASHER		4	

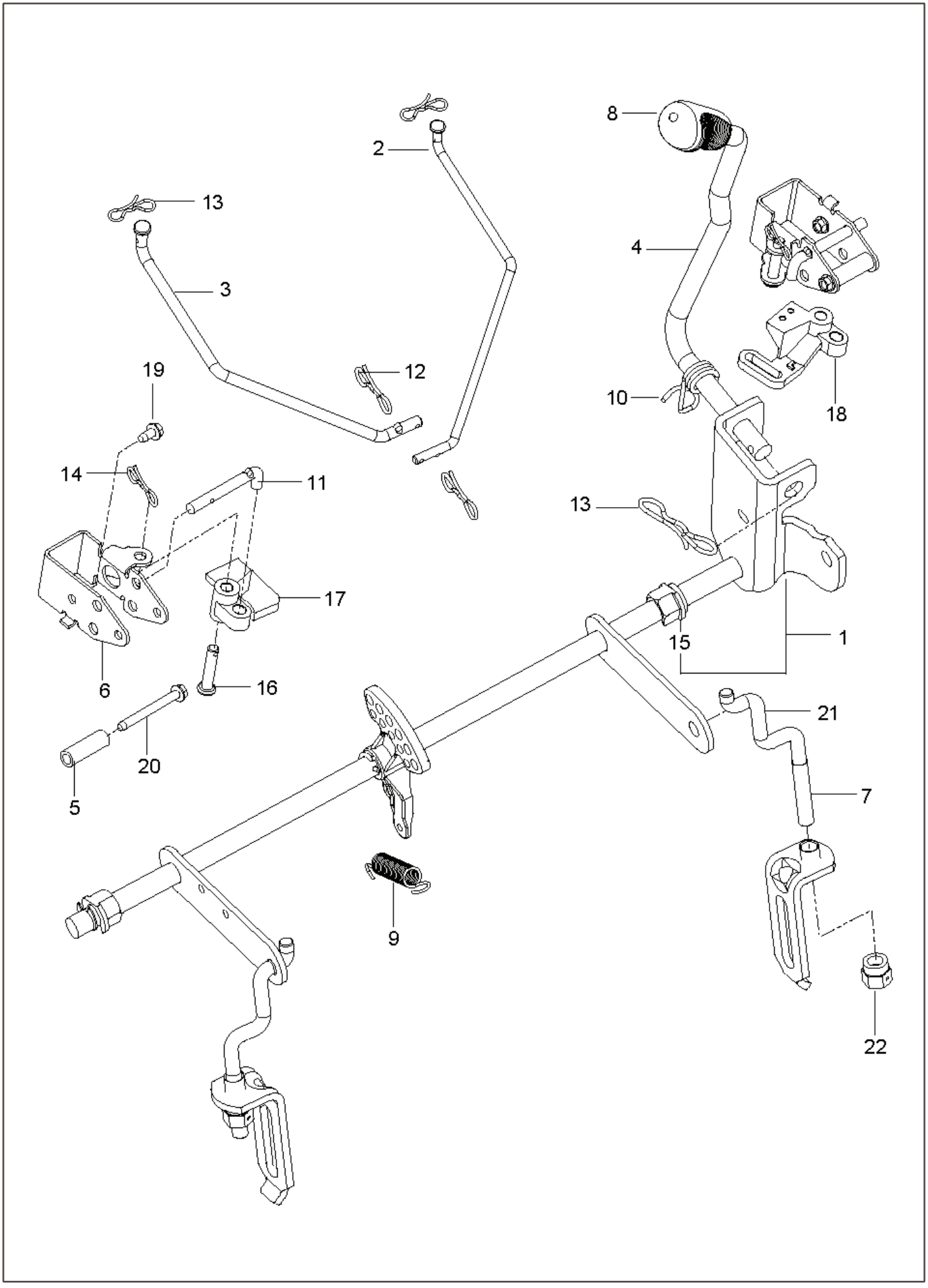

8
2
13
4
3
19
12
10
18
14
11
13
17
15
1
6
16
21
20
5
7
9
22

REF.	PART NO.	DESCRIPTION	REMARK	QTY.	KIT
1	586429702	SHAFT ASSY		1	14, 22
2	586457101	LINK		1	
3	586457201	LINK		1	
4	586428701	HANDLE		1	8, 10, 12
5	580486101	SPACER		2	
6	585682102	BRACKET		2	
7	522858601	ASSEMBLY		2	
8	532445060	LEVER		1	
9	586867601	SPRING		1	
10	532196314	SPRING		1	
11	585682001	ROD		2	
12	587225301	PIN		4	
13	532194209	SPRING		2	
14	532194208	PIN		2	
15	510184901	BUSHING		2	
16	585701401	PIN		2	
17	586457501	BELLCRANK		1	
18	586457401	BELLCRANK		1	
19	532137729	SCREW		2	
20	586561301	SCREW		2	
21	525847201	LINK		2	
22	532175994	NUT		1	

*OPTIONAL

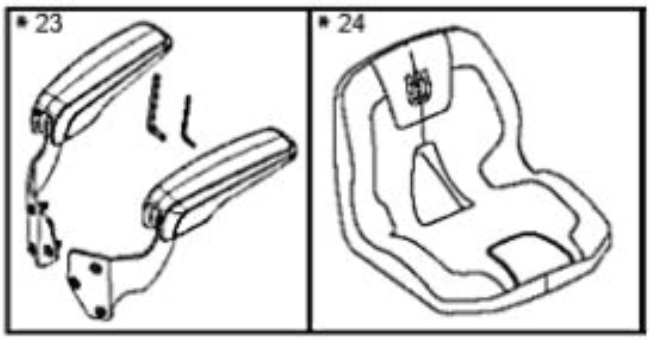
*23
*24

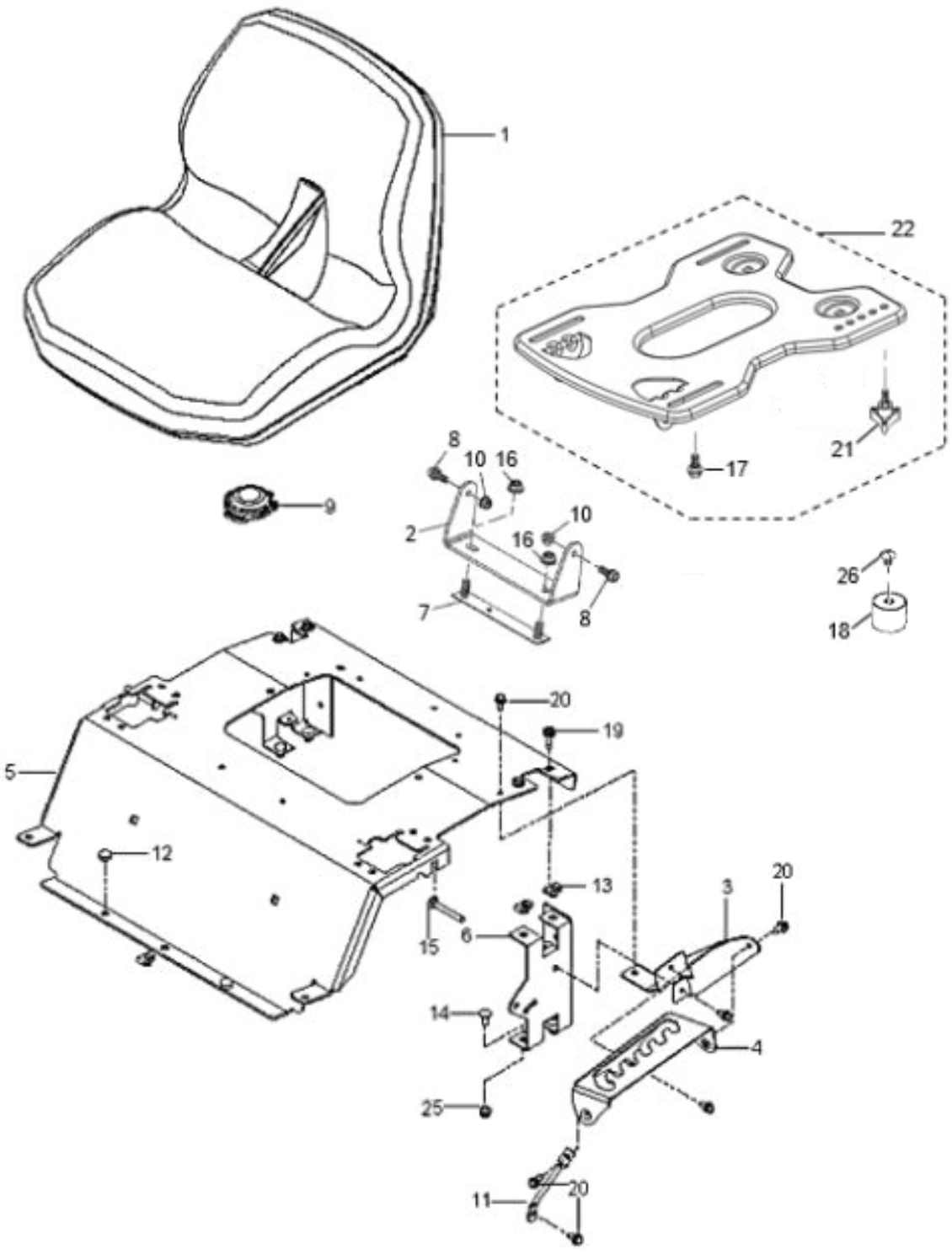
1
22
21
17
8
10
16
9
2
10
16
7
8
26
18
20
19
5
12
13
3
20
15
6
14
4
25
11
20

REF.	PART NO.	DESCRIPTION	REMARK	QTY.	KIT
1	597658101	SEAT		1	
2	597330002	BRACKET		1	
3	586220802	SUPPORT PLATE		1	
4	586221202	PLATE		1	
5	597160003	PLATE		1	
6	580308202	SUPPORT		1	
7	590777602	BRACKET		1	
8	596240701	BOLT		2	
9	532192749	SWITCH.SEAT.DP W/RAMPS		1	
10	594944401	NUT		2	
11	586428601	SUPPORT LEG		1	
12	585989301	BUMPER		2	
13	539104763	CLIP		5	
14	539990316	BOLT		4	
15	510422701	SCREW		2	
16	521996502	NUT		2	
17	597781801	BOLT		2	
18	597553401	BUMPER		2	
19	874490512	BOLT		4	
20	817000510	BOLT		6	
21	597783101	KNOB		2	
22	598001601	SERVICE KIT		1	
23	597658203	SERVICE KIT		1	
24	597959401	COVER		1	
25	539112899	NUT, 5/16–18, NYLOC		4	
26	597869301	BOLT		2	

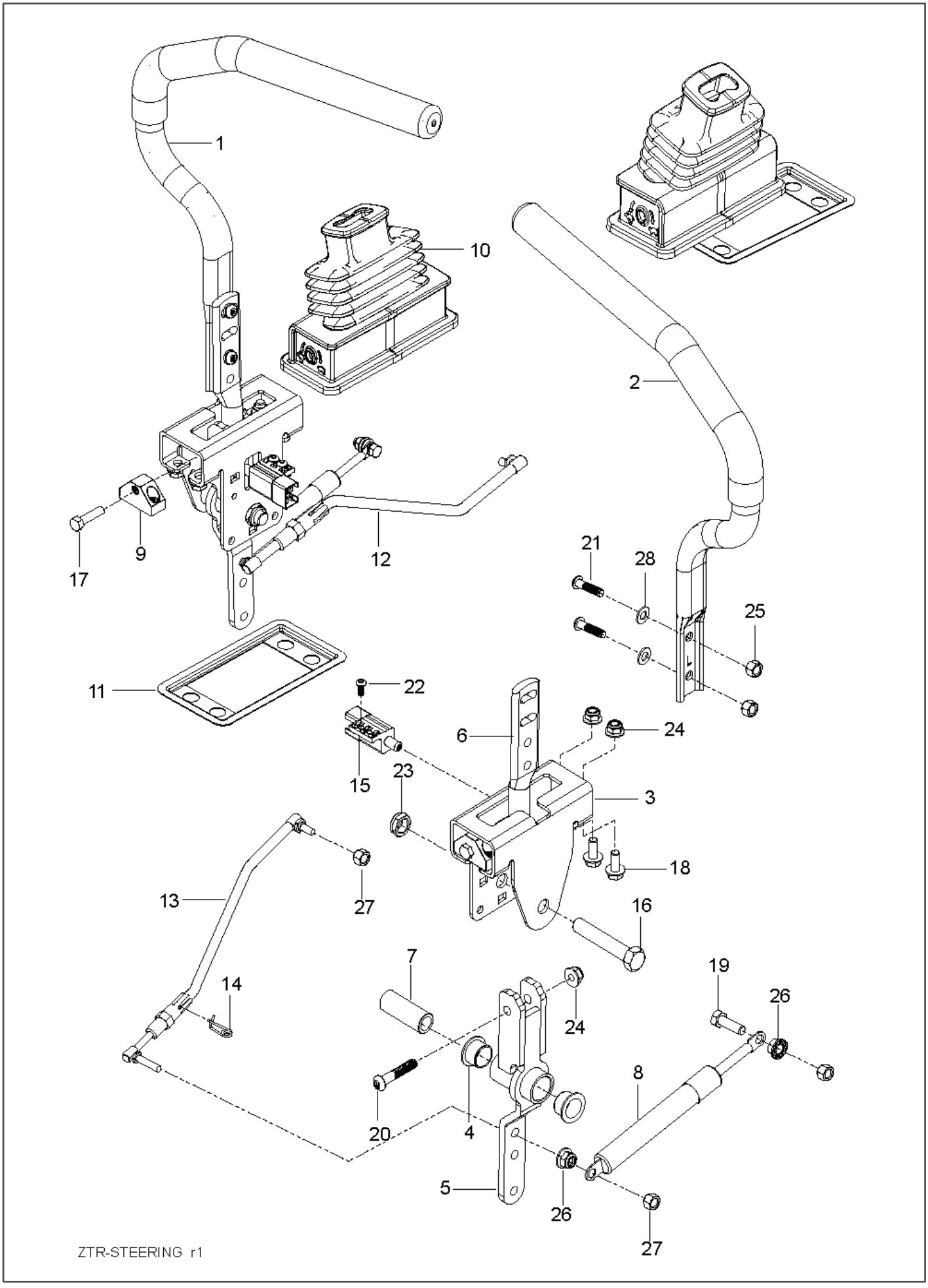

ZTR-STEERING r1

REF.	PART NO.	DESCRIPTION	REMARK	QTY.	KIT
1	590090803	TUBE		1	
2	590090804	TUBE		1	
3	585124705	BRACKET		2	
4	539131518	BEARING		4	
5	576140301	LEVER		2	
6	587601702	LEVER		2	
7	584927201	SPACER		2	
8	539102720	GAS SPRING		2	
9	581437501	BLOCK		2	
10	585831601	BOOT		2	
11	585488202	FLANGE		2	
12	588604901	ROD		1	14
13	588605001	ROD		1	14
14	532199849	SPRING RETAINER		2	
15	587601501	SWITCH		2	
16	874780844	BOLT		2	
17	585986101	BOLT		2	
18	874490512	BOLT		8	
19	539990209	SCREW		2	
20	587885301	SCREW		2	
21	585985901	BOLT		4	
22	586936001	SCREW		2	
23	539108010	NUT		2	
24	539112899	NUT, 5/16–18, NYLOC		10	
25	585986001	NUT		4	
26	539990585	NUT		4	
27	873800500	LOCK NUT		4	
28	819111116	WASHER		4	

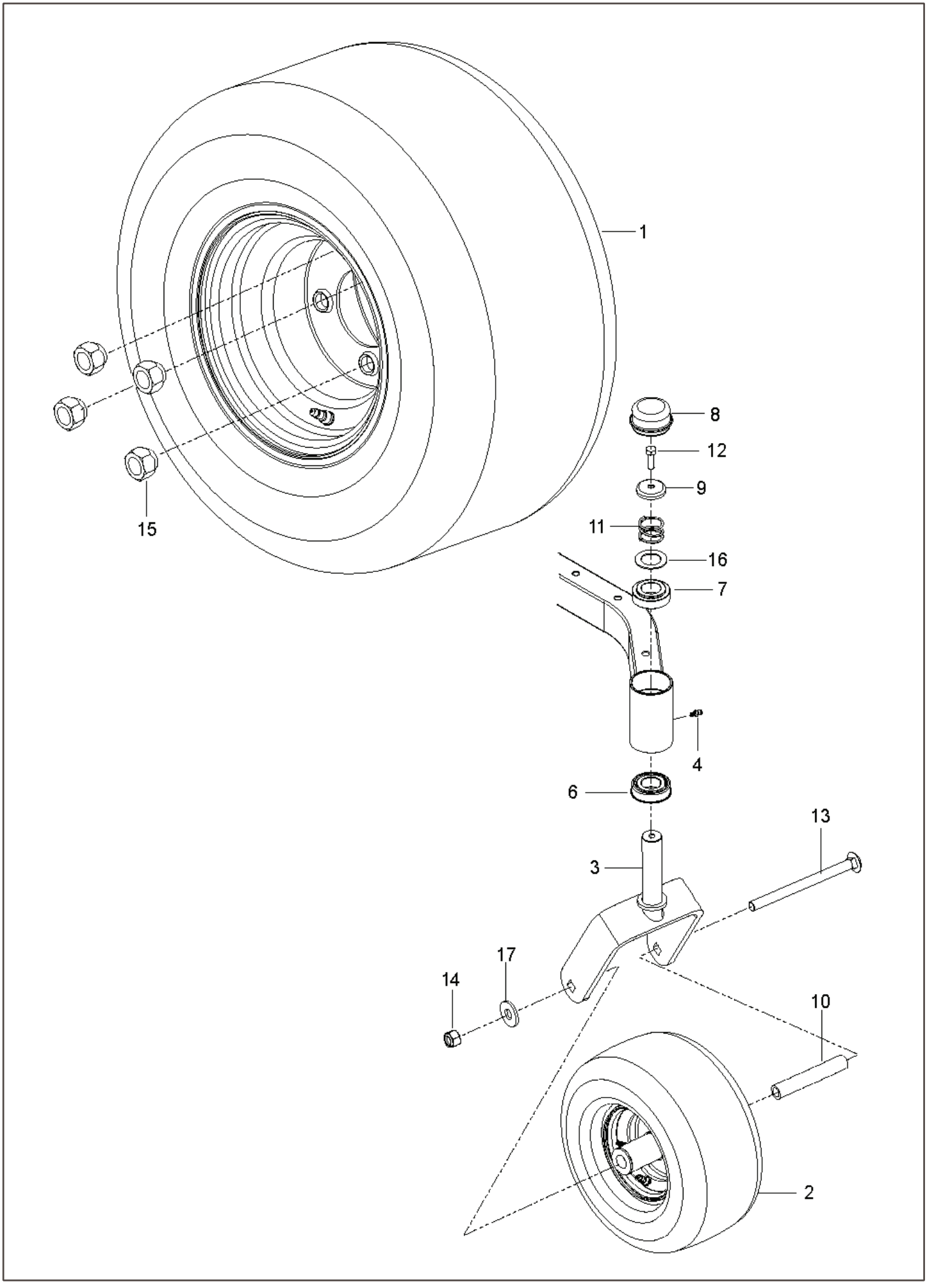
1
15
8
12
9
11
16
7
4
6
13
3
17
14
10
2

REF.	PART NO.	DESCRIPTION	REMARK	QTY.	KIT
1	590486601	WHEEL		2	
2	576588602	WHEEL ASSY		2	
3	586650302	YOKE		2	
4	539115638	FITTING		2	
6	539112660	BEARING		2	
7	539117901	BUSHING		2	
8	539102535	CAP		2	
9	539115749	CASTER PLUG		2	
10	585995401	SPACER		2	
11	539115747	SPRING		2	
12	874950516	SCREW		2	
13	576601501	SCREW		2	
14	873930800	NUT		2	
15	587653902	NUT		8	
16	539115675	WASHER		2	
17	819182212	WASHER		2	

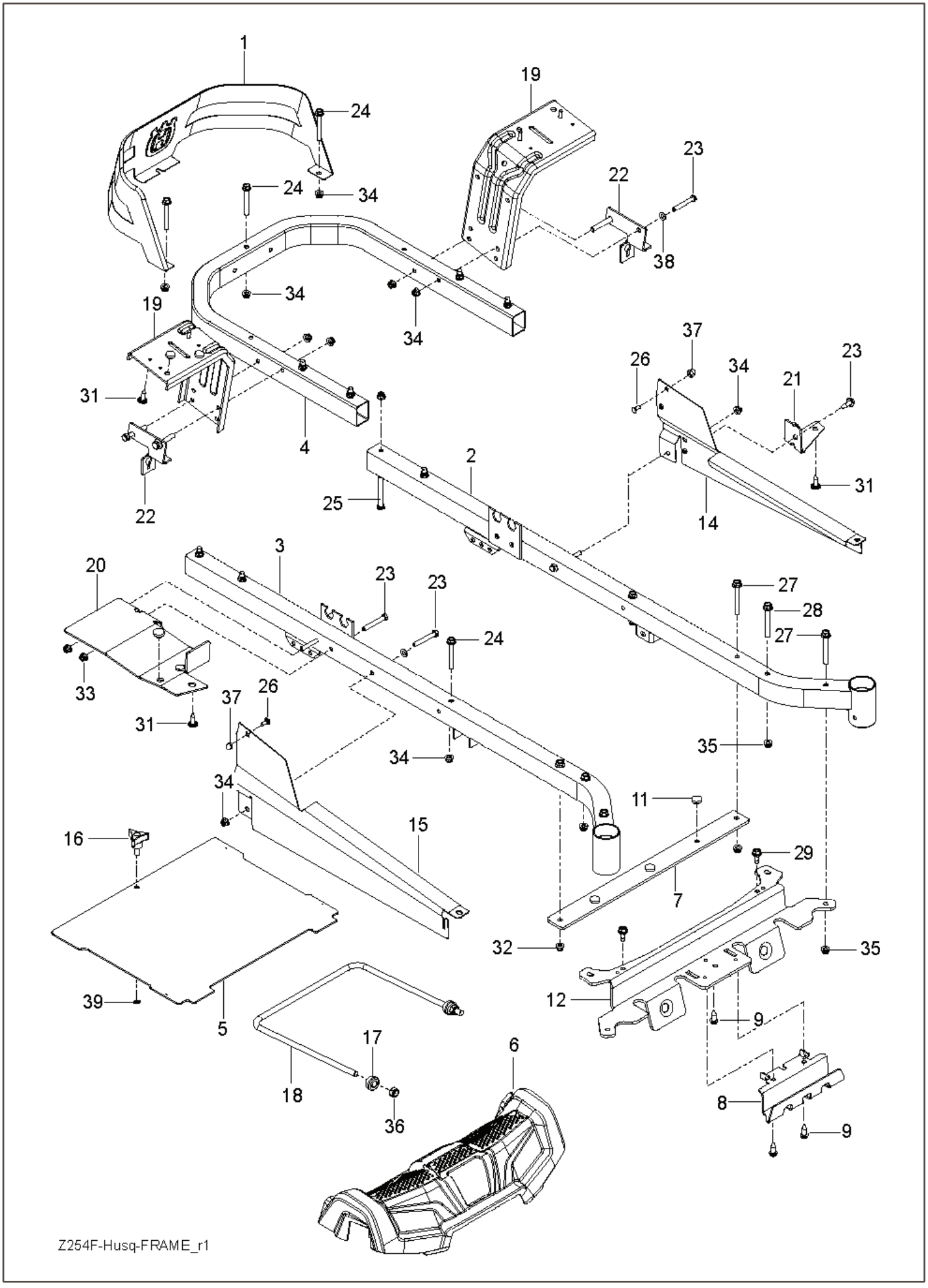
1
19
24
24
34
23
22
38
34
34
19
37
26
34
21
23
31
4
2
25
22
14
31
3
20
23
23
27
28
24
27
33
31
37
26
35
34
34
11
16
15
29
7
32
35
12
39
5
9
17
6
18
36
8
9
Z254F-Husq-FRAME_r1

REF.	PART NO.	DESCRIPTION	REMARK	QTY.	KIT
1	585039802	GUARD		1	
2	589283402	FRAME TUBE		1	
3	589283302	FRAME TUBE		1	
4	584991002	TUBE		1	
5	581448602	PLATE		1	
6	586703801	FRONT COVER		1	
7	585523004	SUPPORT		1	
8	585523204	SKID PLATE		1	
9	817000510	BOLT		1	
11	585989301	BUMPER		7	
12	585523104	CROSS MEMBER		1	
14	585331602	COVER		1	
15	585331502	COVER		1	
16	539104411	KNOB		1	
17	532195263	BUSHING		2	
18	521938101	LINK		1	
19	580501302	BRACKET		2	
20	585523404	SUPPORT		1	
21	585523604	SUPPORT		1	
22	585474302	BRACKET		2	
23	874780536	BOLT		7	
24	874780544	BOLT		5	
25	874780648	BOLT		8	
26	585940001	BOLT		2	
27	577117701	SCREW		4	
28	586654301	BOLT		2	
29	586881101	BOLT		2	
31	532416358	SCREW		6	
32	532421756	SCREW		2	
33	873900500	NUT		2	
34	539112899	NUT, 5/16–18, NYLOC		9	
35	521996501	NUT		8	
36	539119124	NUT		2	
37	585938101	NUT		2	
38	819111116	WASHER		6	
39	532423063	WASHER		1	

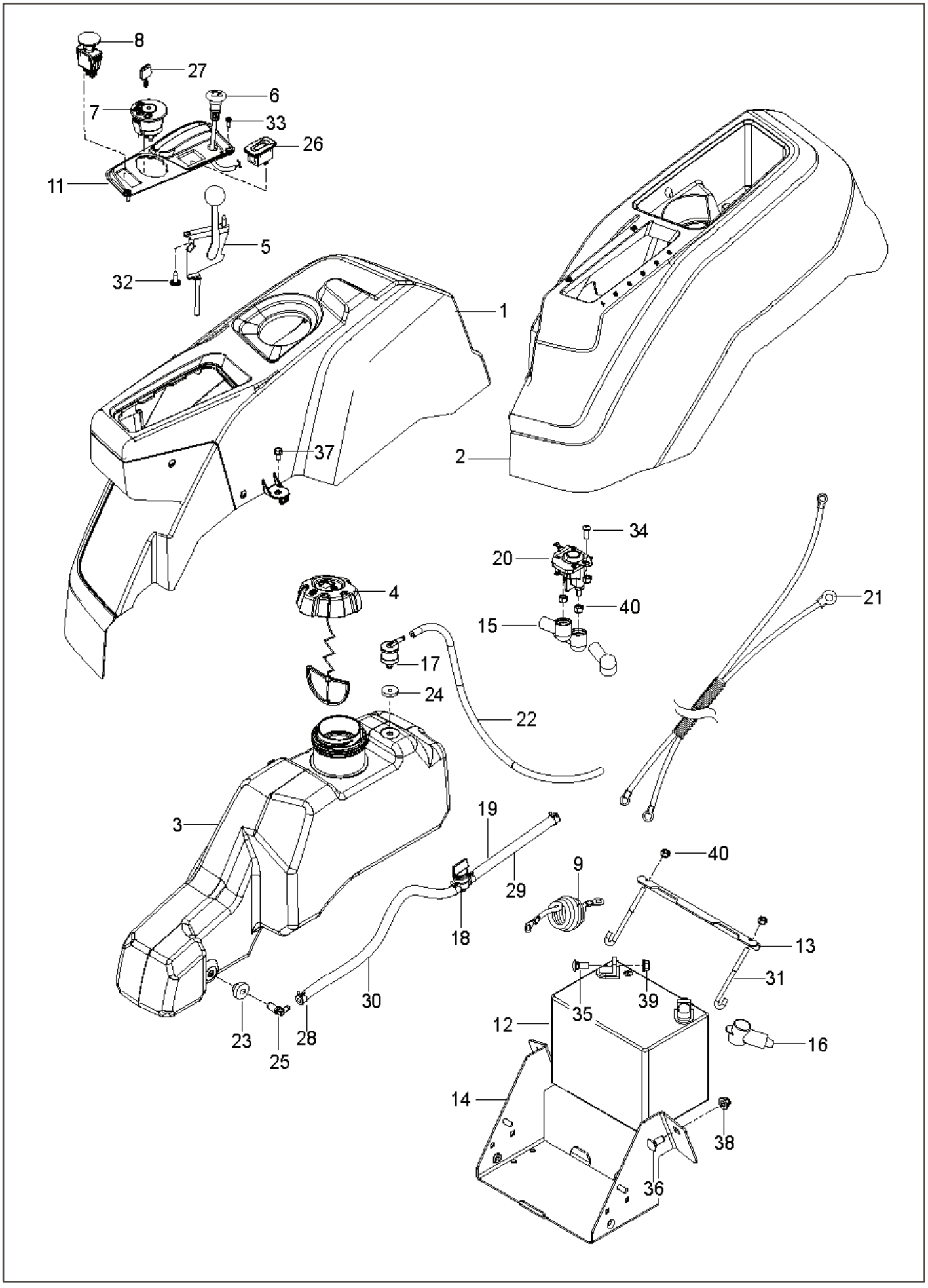
8
27
6
7
33
26
11
5
32
1
37
2
34
20
4
40
21
15
17
24
22
3
19
40
9
29
18
13
31
30
35
39
12
16
23
28
25
14
38
36

REF.	PART NO.	DESCRIPTION	REMARK	QTY.	KIT
1	585522801	CONSOLE ASSY		1	
2	586621201	CONSOLE ASSY		1	
3	589924702	FUEL TANK ASSY		1	23, 24, 25
4	585124801	FUEL CAP ASSY		1	
5	539112438	THROTTLE CABLE		1	
6	586881501	CHOKE CONTROL ASSY		1	
7	539107541	IGNITION SWITCH		1	
8	582107602	SWITCH		1	
9	586108201	HARNESS		1	
11	585522701	CONTROL PANEL		1	
12	539102463	BATTERY		1	
13	510030003	BRACKET		1	
14	582609602	BOX		1	
15	532131563	COVER		3	
16	539102759	INSULATOR		1	
17	576618101	TANK VENT		1	
18	539916325	VALVE		1	
19	586123906	FUEL HOSE		1	18, 28, 29, 30
20	582042801	SOLENOID		1	
21	587198601	HARNESS		1	
22	587044550	HOSE		1	
23	532003645	BUSHING		1	
24	532437492	GROMMET		1	
25	532139277	NIPPLE		1	
26	586161801	HOUR METER		1	
27	532411933	KEY		1	
28	532123487	HOSE CLAMP		4	
29	587044810	HOSE		1	
30	587044818	HOSE		1	
31	588839401	HOOK		2	
32	532141841	SCREW		2	
33	545227101	SCREW		2	
34	539111229	SCR 1/4–20 X 5/8 BTN SKT HD ZD		1	
35	539990316	BOLT		2	
36	539990645	BOLT		2	
37	817490408	SCREW		2	
38	521996501	NUT		2	
39	539112899	NUT, 5/16–18, NYLOC		2	
40	539976978	NUT		5	
	586337301	HARNESS	NOT SHOWN	1	
	586548101	HARNESS		1	
	532109748	RELAY	NOT SHOWN	1	
	505280001	TIE WRAP	NOT SHOWN	1	

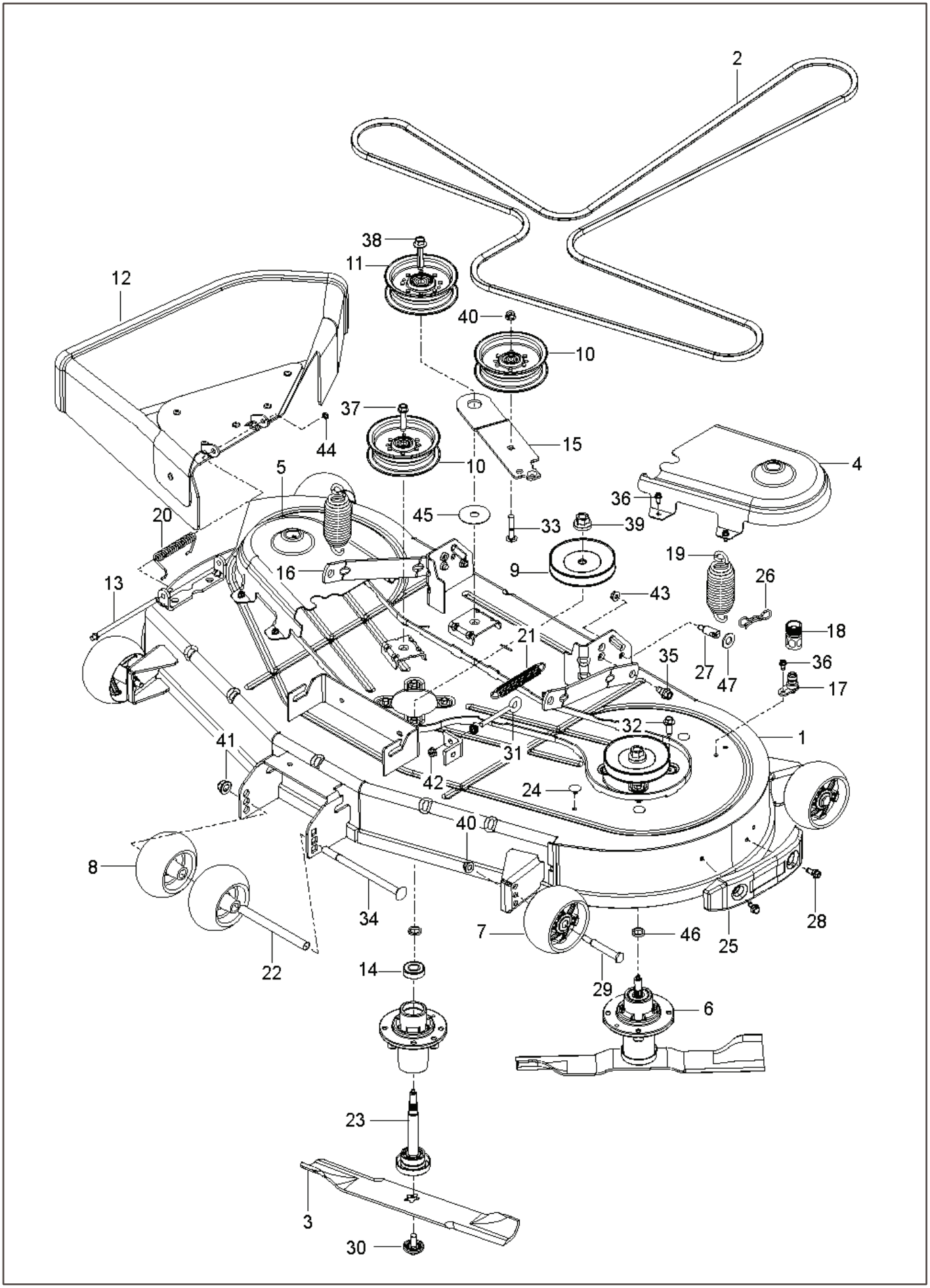
2
38
11
12
40
10
37
44
15
10
4
5
36
20
45
33
39
19
16
9
26
13
43
18
21
35
27
47
36
17
32
1
41
31
42
24
40
8
34
7
46
25
28
22
14
29
6
23
3
30

REF.	PART NO.	DESCRIPTION	REMARK	QTY.	KIT
1	582359102	DECK SHELL ASSY		1	
2	592951801	BELT		1	
3	582760501	BLADE		3	
4	590304403	COVER		1	
5	590304203	COVER		1	
6	539131898	SPINDLE		3	14, 23
7	589527301	WHEEL		4	
8	574169601	ROLLER		2	
9	532175708	PULLEY ASSY		3	
10	532197379	PULLEY		2	
11	532197380	PULLEY		1	
12	590632201	DEFLECTOR ASSY		1	
13	532131491	SHAFT		1	
14	532110485	BEARING		1	
15	582219602	ARM		1	
16	587140502	ARM		2	
17	532415598	HOSE COUPLING		1	
18	532416405	COUPLING		1	
19	539118762	SPRING		2	
20	587354701	SPRING		1	
21	587358401	SPRING		1	
22	574196501	TUBE		1	
23	532187291	SHAFT		1	
24	589813301	PLUG		3	
25	590732501	BUMPER ASSY		1	
26	532194209	SPRING		2	
27	532195161	STUD		2	
28	532170165	BOLT		2	
29	532193406	BOLT		4	
30	532193003	SCREW		3	
31	539115574	EYE BOLT		1	
32	584953901	BOLT		12	
33	872110616	BOLT		1	
34	872140864	BOLT		1	
35	532196539	BOLT		2	
36	532137729	SCREW		9	
37	817490628	SCREW		1	
38	588438301	SCREW		1	
39	532400234	NUT		3	
40	873900600	NUT		5	
41	521991101	NUT		1	
42	539990585	NUT		2	
43	873900500	NUT		2	
44	532110452	NUT		1	
45	532178515	WASHER		1	
46	532187690	WASHER		3	
47	819191912	WASHER		2	